DMG48480C021_03WTC

Features:

- **Based on T5L1, running DGUS II system, commercial grade.**
- **2.1-inch circular LCD, 480*480 pixels resolution, 16.7M colors, IPS-TFT-LCD, wide viewing angle.**
- **Circular CTP.**

DWIN Technology Technical Document

1. Hardware and interface

1.1 Hardware interface

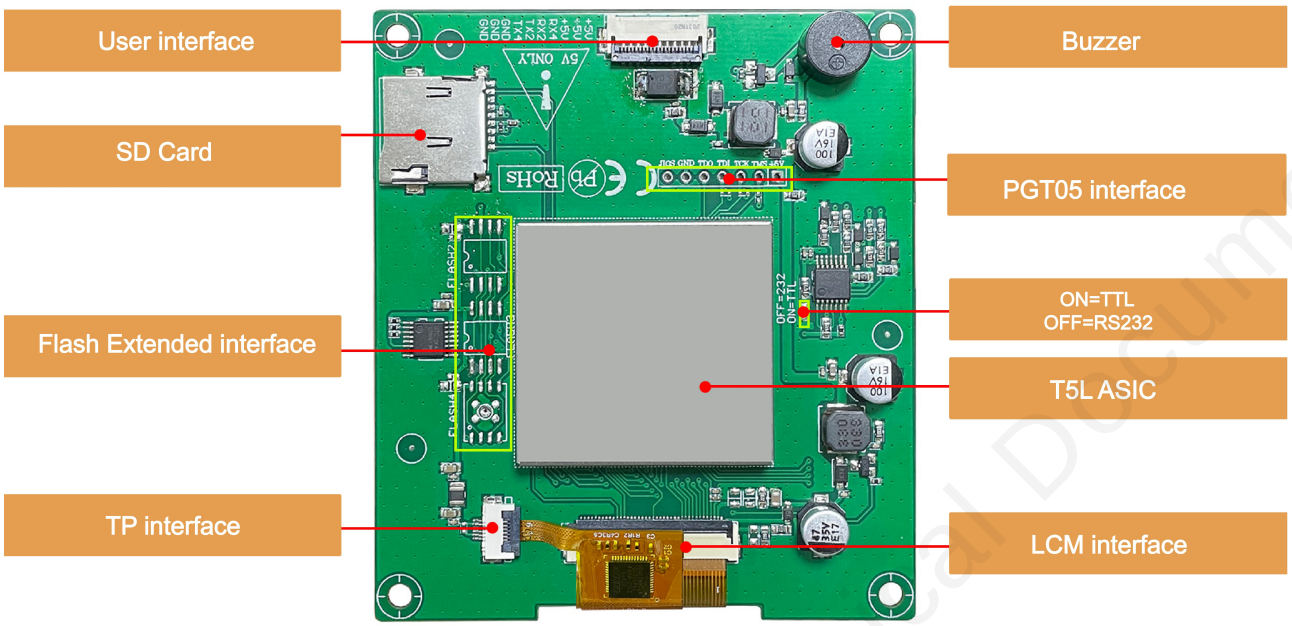

Hardware interface

DWIN Technology Technical Document

1.2 Hardware and interface description

No.	Name	Description
1	T5L1 ASIC	Developed by DWIN. Mass production in 2019,1MBytes Nor Flash on the chip, 512KBytes used to store the user database. Rewrite cycle: over 100,000 times
2	LCM interface	FPC40_0.5mm, RGB interface
3	CTP interface	FPC6_0.5mm, IIC interface
4	User interface	10Pin_1.0mm latching socket for power supply and serial communication. Download rate(typical value): 12KByte/s
5	Flash	16MBytes NOR Flash, for fonts, pictures and audio files. Rewrite cycle: over 100,000 times
6	Expand Flash interface	Expandable to 64Mbytes NOR Flash or 48Mbytes NOR Flash+512Mbytes NAND Flash
7	SD interface	FAT32. Download files by SD interface can be displayed in statistics. Download rate: 4Mb/s
8	PGT05 interface	When product crashes by accident, you can use PGT05 to update DGUS kernel and make the product return to normal

DWIN Technology Technical Document

2. Specification parameters

2.1 Display parameters

LCD Type	IPS, TFT LCD
Viewing Angle	Wide viewing angle,85°/85°/85°/85°(L/R/U/D)
Resolution	480×480 pixels (support 0°/90°/180°/270°)
Color	24-bit 8R8G8B
Active Area (A.A.)	D=53.3mm
View Area (V.A.)	-
Backlight Mode	LED
Backlight Service Life	>20000 hours (Time of the brightness decaying to 50% on the condition of continuous working with the maximum brightness)
Brightness	350nit
Brightness Control	0~100 grade (When the brightness is adjusted to 1%~30% of the maximum brightness, flickering may occur and is not recommended to use in this range)
Note:You can use dynamic screen saver wallpapers to avoid afterimages caused by fixed page display for a long time.	

2.2 Touch parameters

Type	CTP (Capacitive touch panel)
Structure	G+F structure with surface cover of tempered glass
Touch Mode	Single touch, support continuous sliding touch
Surface Hardness	6H
Light Transmittance	Over 90%
Life	Over 1,000,000 times touch

DWIN Technology Technical Document

2.3 Serial interface parameters

Mode	UART2: ON=TTL/CMOS; OFF=RS232 UART4: ON=TTL/CMOS; OFF=RS232 (Only available after OS configuration)				
Voltage Level	Test Condition	Min	Typ	Max	Unit
	Output 1, Iout = -4mA	2.7	3.2	-	V
	Output 0, Iout = 4mA	-	0.1	0.4	V
	Input 1	2.4	3.3	5.5	V
	Input 0	0	-	1.0	V
Baud Rate	3150~3225600bps, typical value of 115200bps				
Data Format	UART2: N81 UART4: N81/E81/O81/N82 , 4 modes (OS configuration)				
Interface Cable	10Pin_1.0mm				

2.4 Electrical specifications

Rated Power	<5W	
Operating Voltage	4.5~5.5V, typical value of 5V	
Operating Current	130mA	VCC=5V, max backlight
	60mA	VCC=5V, backlight off
Recommended power supply: 5V 1A DC		

2.5 Operating environment

Operating Temperature	-20℃~70℃ (5V @ 60% RH)
Storage Temperature	-30℃~80℃
Conformal coating	None
Operating Humidity	10%~90%RH, typical value of 60% RH

DWIN Technology Technical Document

3. Packaging & dimensions

Form Factor	75.0（W）mm×85.0（H）mm×12.3（T）mm
Net Weight	70g

Packaging Standards

Model	Dimensions	Layer	Quantity/Layer	Quantity(Pcs)
Carton1：	220mm(L)×160mm(W)×47mm (H)	-	-	-
Carton2：	250mm(L)×200mm(W)×80mm (H)	2	2	4
Carton3：	320mm(L)×270mm(W)×80mm (H)	2	4	8
Carton4：	450mm(L)×350mm(W)×300mm(H)	-	-	-
Carton5：	600mm(L)×450mm(W)×300mm(H)	-	-	-

Disclaimer: The product design is subject to alternation and improvement without prior notice.

DWIN Technology Technical Document

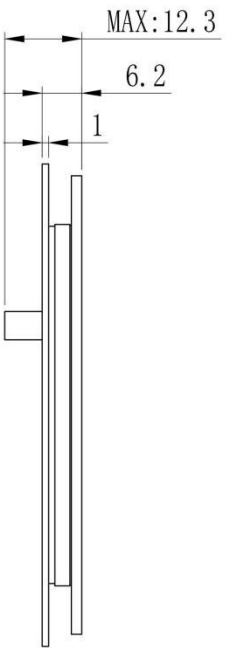

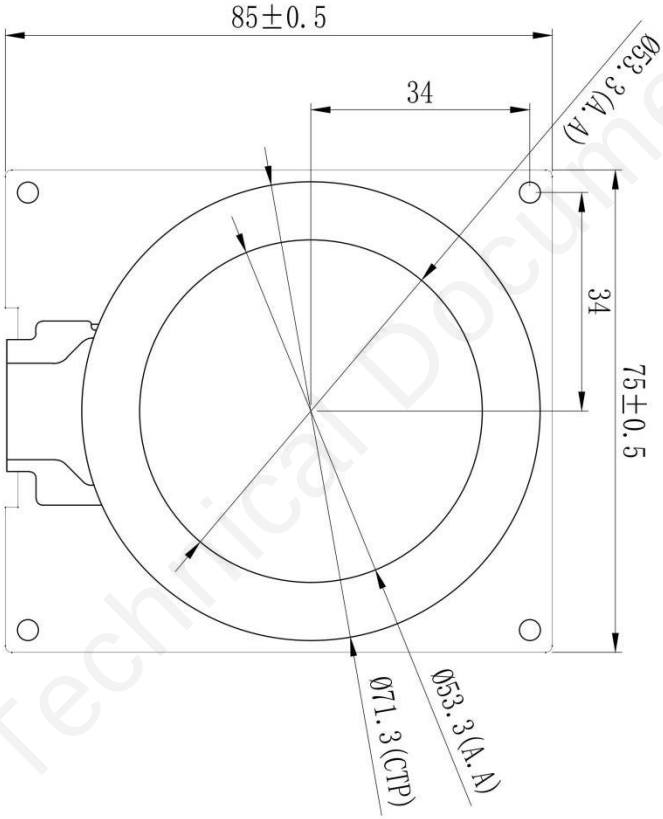

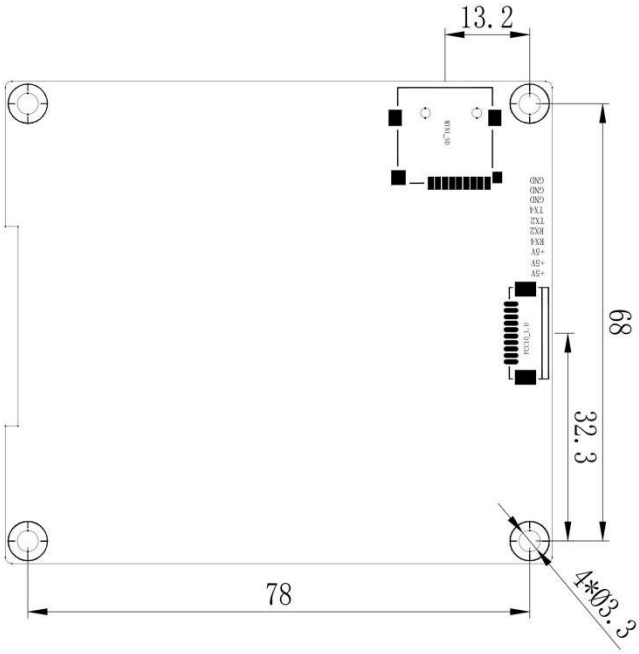

Definition	Pin#	Type	Description
GND	8,9,10	P	GND
TX4	7	O	UART4 Output
TX2	6	O	UART2 Output
RX2	5	I	UART2 Input
RX4	4	I	UART4 Input
+5V	1,2,3	P	Power Input

1. Location hole is used as position reference.
2. Unmarked Tolerance is +/-0.3mm

Note: Active area is marked in Dash lines

Model	DMG48480C021_03WTC				
Drawing	A 4	Drawn	T.B	Date	220623
Scale		Review		Date	DWIN Technologies
Unit	m m	Approval		Date	

DWIN Technology Technical Document

4. Debugging tools

It is recommended for new users of DWIN smart LCMs to purchase official accessories. For more details, please refer to customer service center.

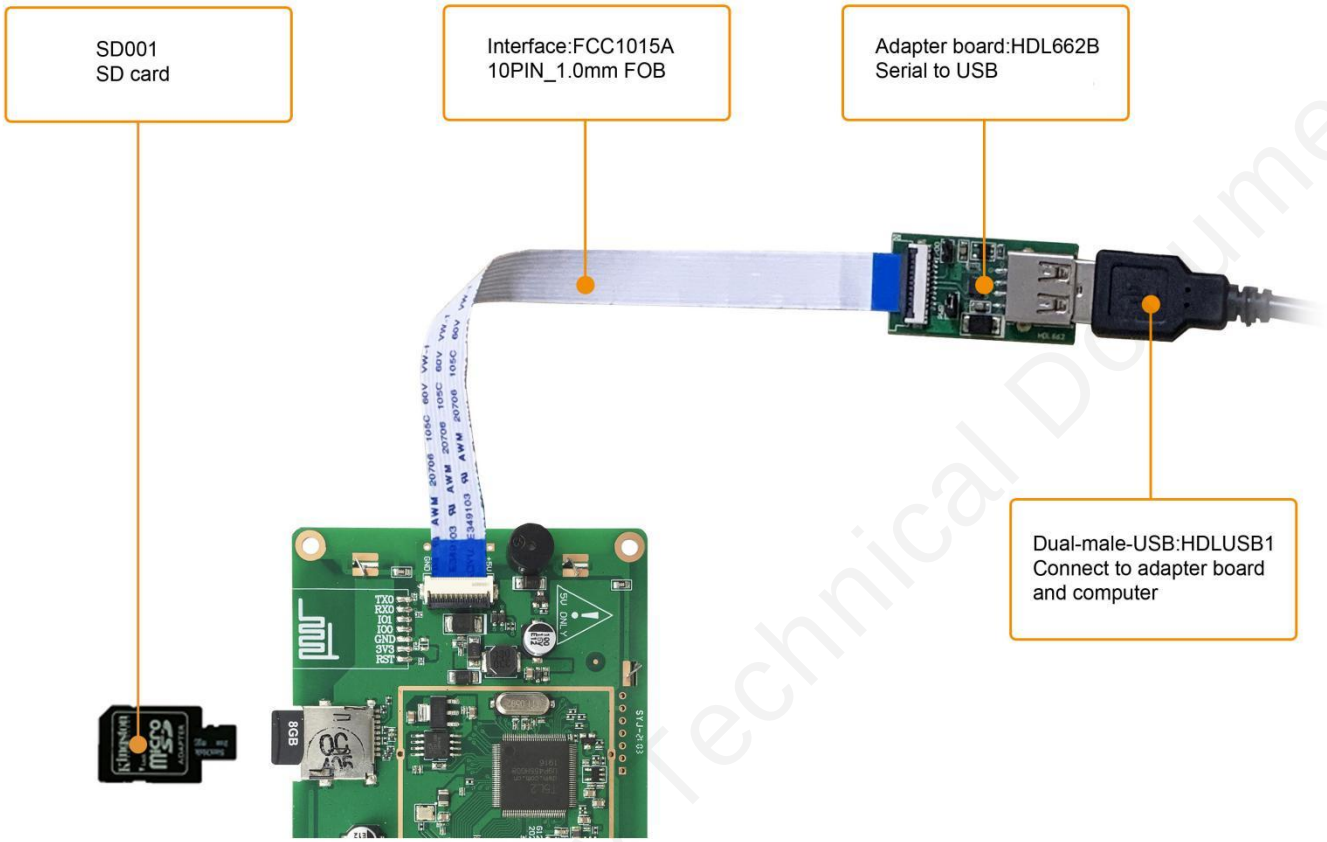

DWIN Technology Technical Document

5. T5L series IC features

（1）Mature and stable 8051 core which is the most widely used with the maximum operating frequency of T5L is up to 250MHz, 1T(single instruction cycle)high speed operation.

（2）Separate GUI CPU Core running DGUS II System:

- High-speed display memory, 2.4GB/S bandwidth.
- 2D hardware acceleration, the decompression speed of JPEG is up to 200fps@1280*800 and the UI with animation and icons as its main feature is extremely cool and smooth.
- Images and icons stored in JPEG format. Adopt Low-cost 16Mbytes SPI Flash.
- Support CTP or RTP with adjustable sensitivity and maximum 400 Hz touch frequency.
- 1-way 15bit 32Ksps PWM digital power amplifier driver loudspeaker, save power amplifier cost and achieve high signal-to-noise ratio and sound quality restoration.
- 128Kbytes variable storage space for exchanging data with OS CPU Core and memory.
- Support DGUS development and simulation on PC. Support background remote upgrade.

（3）Separate CPU (OS CPU) core runs user 8051 code or DWIN OS system and user CPU is omitted in practical application:

- Standard 8051 architecture and instruction set, 64Kbytes code space, 32Kbytes on-chip RAM.
- 64 bit integer mathematical operation unit (MDU), including 64 bit MAC and 64 bit divider.
- 28 IOs, 4-channel UARTs, 1-channel CAN, up to 8-channel 12-bit A/Ds and 2-channle 16-bit PWM of adjustable resolution.
- Support IAP on-line simulation and debugging with unlimited number of breakpoints.
- Upgrade code online through DGUS system.

（4）1Mbytes on-chip Flash with DWIN patent encryption technology ensure code and data security.

（5）Operating temperature ranges from -40℃ to +85℃(IC operating temperature customizable from -55℃ to 105℃).

DWIN encourages users to design your own customized product based on T5L

DWIN Technology Technical Document

6. Revision records

Rev	Revise Date	Content	Editor
00	2022-12-15	First Edition	Xu Ying

Please contact us if you have any questions about the use of this document or our products, or if you would like to know the latest information about our products:

- Customer service Tel: +86 400 018 9008
- Customer service email: dwinhmi@dwin.com.cn
- DWIN Developer Forum: https://forums.dwin-global.com/

Thank you all for continuous support of DWIN, and your approval is the driving force of our progress!

DWIN Technology Technical Document